MATH441/MATH541
Applied Mathematics II: Complex Variables
Lecture slides 8: The Cauchy Integral Theorem

Nick Strigul
Washington State University Vancouver
nick.strigul@wsu.edu

February 8, 2023

Lecture outline

1. Symply connected domain
2. The Cauchy Integral Theorem
3. Proof of the theorem
4. Examples

Simply connected domain

Definition

A domain D is said to be *simply connected* if all points in the interior of any Jordan curve (simple and closed, i.e. homeomorphic to a circle) which lies entirely in D are also points of D.

Example

$|z| < 1$ is simply connected, where as $0 < |z| < 1$ is not.

The Cauchy Integral Theorem. Part 1

Theorem

If $f(z)$ is regular and single-valued in a bounded, simply-connected domain D, and if C is a simple closed contour situated in D, then

$$\oint_C f(z)\,dz = 0$$

Convention: If C is a simple closed continuous curve in D, then its interior is simply-connected. The point z is said to describe C in the *positive* sense if, as it moves along C, the points of the interior domain of C in the immediate vicinity lie to its left.

Example

$\oint_C z^n dz$ where C is any closed contour and $n \neq -1$, n an integer.

Now $z^n = F'(z)$ where $F(z) = \dfrac{z^{n+1}}{n+1}$, so that $\int_{z_0}^{z} z^n dz = F(z) - F(z_0)$. Hence $\oint_C z^n dz = 0$, because $z = z_0$ for a closed contour.

The Cauchy Integral Theorem: Example. Part 1

Example

Evaluate $\oint_C \frac{2z+1}{z^2+3iz}dz$ where C is the circle $|z+3i| = 2$ or radius 2 about $z = -3i$.

Note that $f(z) = (2z+1)/\left(z^2+3iz\right)$ is differentiable except at 0 and $-3i$, where the denominator is zero. The path C encloses $-3i$ but not 0. Using partial fractions we have

$$f(z) = \frac{1}{3i}\frac{1}{z} + \left(2 + \frac{i}{3}\right)\frac{1}{z+3i}$$

By Cauchy's Theorem $\oint_C \frac{1}{z}dz = 0$, since $1/z$ is differentiable on and inside C. Hence

$$\oint_C f(z)\,dz = \left(2 + \frac{i}{3}\right)\oint_C \frac{1}{z+3i}dz$$

Cauchy's Theorem cannot be used to conclude that this last integral is zero. We must evaluate it directly.

The Cauchy Integral Theorem: Example. Part 2

Example

Now we can parametrize C as $z(t) = -3i + 2e^{it}, \ 0 \leq t \leq 2\pi. \implies$

$$\oint_C \frac{1}{z+3i} dz = \int_0^{2\pi} \frac{1}{2e^{it}} 2ie^{it} dt = \int_0^{2\pi} i dt = 2\pi i$$

$$\implies \qquad \oint_C \frac{2z+1}{z^2+3iz} dz = \left(2 + \tfrac{i}{3}\right) 2\pi i = \pi\left(-\tfrac{2}{3} + 4i\right)$$

The Cauchy Integral Theorem: Special case

If we add an additional hypothesis, then the theorem is easy to prove. Write $f(z) = u(x,y) + iv(x,y)$ and assume that u and v and their first partial derivatives are continuous in D. Now we can obtain the conclusion of Cauchy's theorem easily by Green's Theorem (Recall $\oint_C Pdx + Qdy = \int\int_D \left(\frac{\partial Q}{\partial x} - \frac{\partial P}{\partial y}\right) dA$, where D consists of C together with its interior.) We have

$$\oint_C f(z)\,dz = \oint_C f(z(t))\,z'(t)\,dt =$$

$$\oint_C [u(x(t),y(t)) + iv(x(t),y(t))]\left[\frac{dx}{dt} + i\frac{dy}{dt}\right] dt =$$

$$= \oint_C udx - vdy + i\oint_C vdx + udy =$$

$$\int\int_D \left(-\frac{\partial v}{\partial x} - \frac{\partial u}{\partial y}\right) dA + i\int\int_D \left(\frac{\partial u}{\partial x} - \frac{\partial v}{\partial y}\right) dA = 0$$

because both integrands vanish by the Cauchy-Riemann equations. However, the statement of the theorem does not assume continuity of the first partials of u and v. This is unnecessarily restrictive.

The Cauchy Integral Theorem: Lemma 1

To prove Cauchy's theorem we need two lemmas:

Lemma

Lemma: If Γ is a closed path in the plane, then

$$\oint_\Gamma dz = \oint_\Gamma zdz = 0$$

Proof: For the first integral, let $G(z) = z$ and for the second let $H(z) = \frac{1}{2}z^2$. The G and H are differentiable for all z, and $G'(z) = 1$ and $H'(z) = z$ for all z. Since Γ is closed, the result follows.

The Cauchy Integral Theorem: Lemma 2

Lemma

Let $R^{(n)}$ be a set of points on and interior to a rectangle in the plane for $n = 1, 2, \ldots$ Suppose each $R^{(n+1)}$ is contained within $R^{(n)}$. Suppose also that if d_n is the diameter (maximum distance between any two points in the rectangle) of $R^{(n)}$, then $d_n \to 0$ as $n \to \infty$. Then there is exactly one point which belongs to every $R^{(n)}$.

Remark: In the lemma each rectangle in the sequence is contained in the preceding rectangle. Such rectangles are called *nested.* Further, the diameters of successive rectangles get smaller, approaching zero in the limit. In this case the lemma asserts that the rectangles actually shrink to a single point that is common to all of them.

We omit the proof.

Proof of Cauchy Theorem. Step 1. Part 1

Step 1. We first show that Cauchy's theorem holds when C is the perimeter of a rectangle which we shall call Γ.

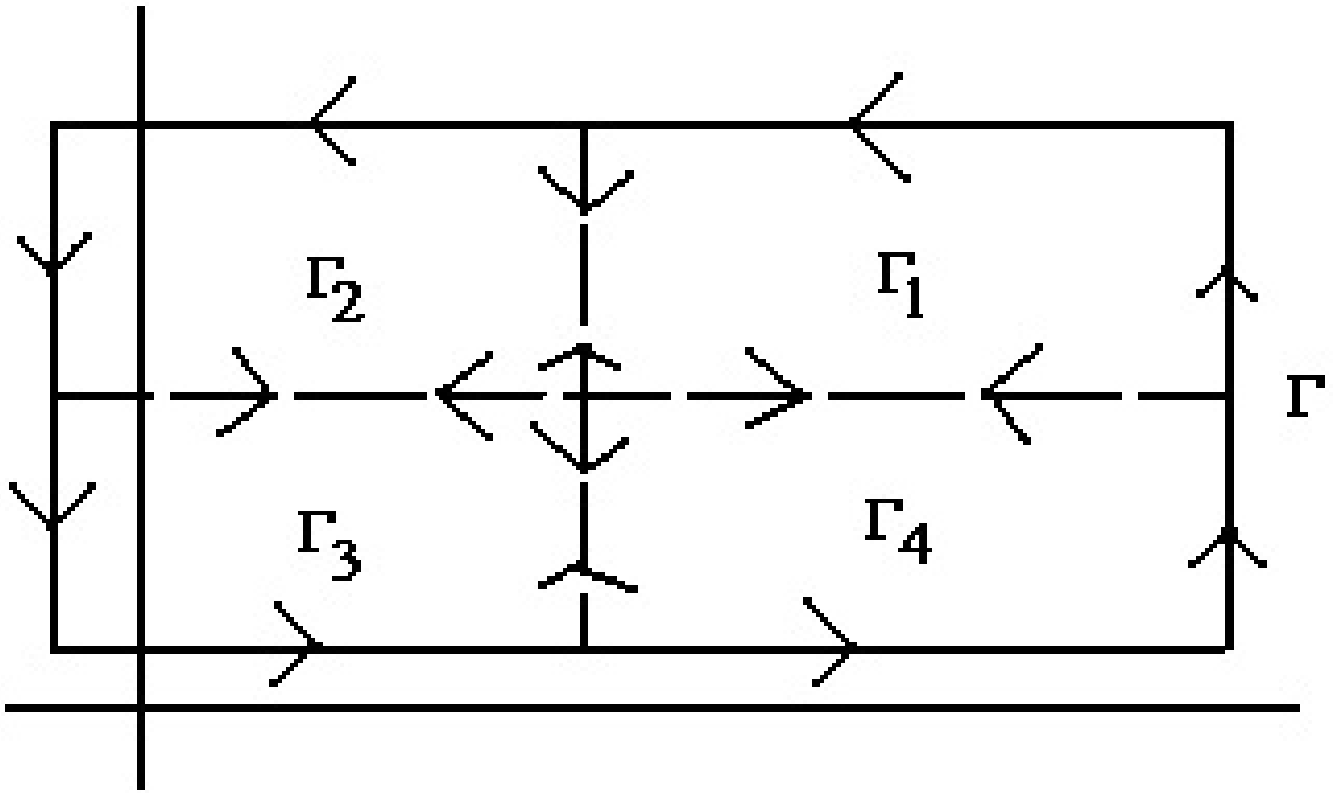

Form four rectangles by inserting segments connecting the midpoints of opposite sides of the rectangle. Label these rectangles $\Gamma_1, \ldots, \Gamma_4$. Each Γ_j is oriented counterclockwise.

Proof of Cauchy Theorem. Step 1. Part 2

Then

$$\oint_{\Gamma} f(z)\,dz = \sum_{j=1}^{4} \oint_{\Gamma_j} f(z)\,dz$$

Each of the four interior segments is part of two interior rectangles, and in this summation is integrated over in both directions. Thus, in the sum on the right the total contribution of the integrals over the newly inserted interior lines is zero. Now,

$$\left|\oint_{\Gamma} f(z)\,dz\right| \leq \sum_{j=1}^{4} \left|\oint_{\Gamma_j} f(z)\,dz\right|$$

Therefore, for at least one of the rectangles, call it $\Gamma^{(1)}$,

$$\frac{1}{4}\left|\oint_{\Gamma} f(z)\,dz\right| \leq \left|\oint_{\Gamma^{(1)}} f(z)\,dz\right|$$

Subdivide $\Gamma^{(1)}$ by drawing segments connecting the midpoints of its opposite sides.

Proof of Cauchy Theorem. Step 1. Part 3

Reasoning as we just did with the first subdivision, this produces four sub-rectangles within $\Gamma^{(1)}$, and for at least one of these, call it $\Gamma^{(2)}$,

$$\frac{1}{4}\left|\oint_{\Gamma^{(1)}} f(z)\,dz\right| \leq \left|\oint_{\Gamma^{(2)}} f(z)\,dz\right|$$

so that

$$\frac{1}{4^2}\left|\oint_{\Gamma} f(z)\,dz\right| \leq \left|\oint_{\Gamma^{(2)}} f(z)\,dz\right|$$

Proof of Cauchy Theorem. Step 1. Part 4

Continuing in this manner we get an infinite sequence of rectangles $\Gamma^{(1)}$, $\Gamma^{(2)}$, $\Gamma^{(3)}$, $\Gamma^{(4)}, \ldots$ If we let $R^{(n)}$ consist of all points on or in the interior of $\Gamma^{(n)}$, then each $R^{(n)}$ is contained in all the preceding $R^{(j)\prime}$s (for $j < n$) and each $R^{(n)}$ is a closed (solid rectangular) set. Furthermore,

$$\frac{1}{4^n}\left|\oint_{\Gamma} f(z)\,dz\right| \leq \left|\oint_{\Gamma^{(n)}} f(z)\,dz\right| \qquad (1)$$

It is easy to see that $R^{(n)}$ has diameter $d/2^n$ and perimeter $p/2^n$, where d is the diameter of Γ and p is the perimeter of Γ.
By the second lemma above there is exactly one point ζ common to every $R^{(n)}$.

Proof of Cauchy Theorem. Step 1. Part 5

By hypothesis f is differentiable at ζ. Since $f(\zeta)$ and $f'(\zeta)$ are constants, then by the first lemma, for any positive integer j

$$\oint_{\Gamma^{(j)}} f(z)\,dz = \oint_{\Gamma^{(j)}} \left[f(z) - f(\zeta) - (z-\zeta) f'(\zeta)\right] dz \qquad (2)$$

Now $\lim_{z\to\zeta} \left|\dfrac{f(z) - f(\zeta)}{z-\zeta}\right| = f'(\zeta)$. Let $\varepsilon > 0$ be given. Then $\exists$ a $\delta > 0$ such that

$$\left|\frac{f(z) - f(\zeta)}{z-\zeta} - f'(\zeta)\right| < \varepsilon \quad \text{if } 0 < |z-\zeta| < \delta$$

Proof of Cauchy Theorem. Step 1. Part 6

Then

$$|f(z) - f(\zeta) - f'(\zeta)(z-\zeta)| < \varepsilon |z-\zeta| \text{ if } 0 < |z-\zeta| < \delta \qquad (3)$$

Choose N sufficiently large that $R^{(N)}$ is contained inside the disk of radius δ about ζ. Then $0 < |z-\zeta| < \delta \ \ \forall \ \ z$ on $\Gamma^{(N)}$. From (2) and (3)

$$\left| \oint_{\Gamma^{(n)}} f(z)\, dz \right| \leq \oint_{\Gamma^{(N)}} \varepsilon |z-\zeta|\, dz < \varepsilon \frac{d}{2^N} \frac{p}{2^N}$$

because $|z-\zeta| < d/2^N$ and the length of $\Gamma^{(N)}$ is $p/2^N$. Finally, from (1) we get

$$\frac{1}{4^N} \left| \oint_{\Gamma} f(z)\, dz \right| \leq \left| \oint_{\Gamma^{(n)}} f(z)\, dz \right| < \varepsilon \frac{dp}{4^N}$$

Proof of Cauchy Theorem. Step 1. Part 7

so that

$$\left| \oint_{\Gamma} f(z)\, dz \right| < \varepsilon dp$$

Since εdp can be made arbitrarily small, we conclude that

$$\oint_{\Gamma} f(z)\, dz = 0.$$

Proof of Cauchy Theorem. Step 2. Part 1

Step 2: We now prove the theorem for all closed contours C contained in a disk $E : |z - \alpha| < R$ in which $f(z)$ is regular. Define $F(z)$ in E by

$$F(z) = \int_{C_z} f(z)\, dz$$

where C_z is the path.

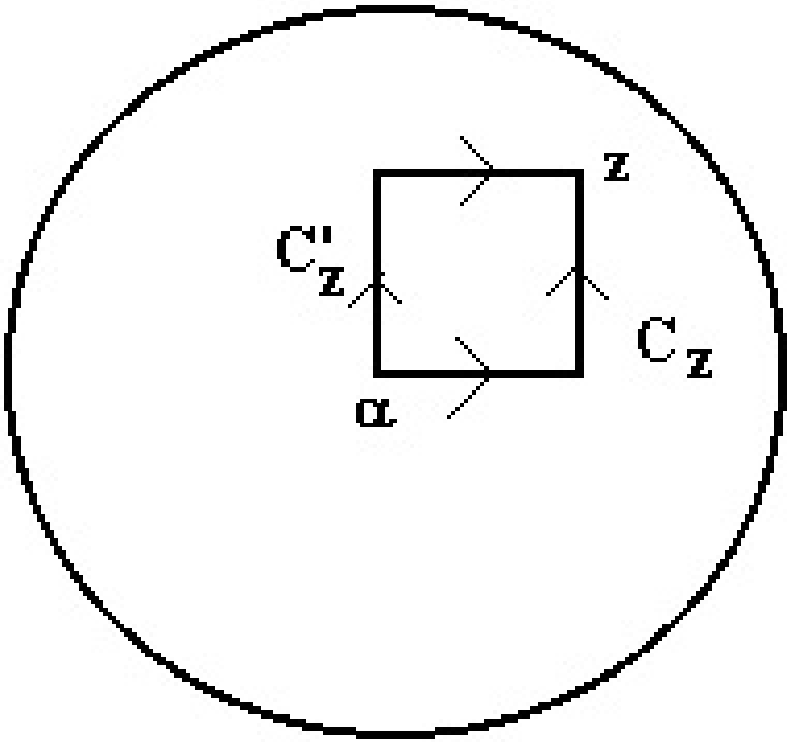

Proof of Cauchy Theorem. Step 2. Part 2

Setting $\alpha = a + ib$ and $z = x + iy$ we have

$$F(z) = \int_a^x f(t + ib)\, dt + i \int_b^y f(x + it)\, dt \tag{4}$$

From Step 1 $\int_{C_z - C_z'} f(z)\, dz = 0$ so that $\left(\int_{C_z} - \int_{C_z'}\right) f(z)\, dz = 0$. Hence $\int_{C_z} = \int_{C_z'}$. Then

$$F(z) = i \int_a^y f(a + it)\, dt + \int_a^x f(t + iy)\, dt \tag{5}$$

Proof of Cauchy Theorem. Step 2. Part 3

We now write $F(z) = U(x, y) + iV(x, y)$, and differentiate (5) and (4) with respect to x and y respectively to get

$$\left.\begin{aligned} U_x + iV_x &= f(x+iy) = f(z) \\ U_y + iV_y &= if(x+iy) = if(z) \end{aligned}\right\} \qquad (6)$$

or $\quad U_x + iV_x + i(U_y + iV_y) = f(z) - f(z) = 0$ Therefore

$$U_x = V_y \quad \text{and} \quad V_x = -U_y$$

that is, the Cauchy-Riemann equations hold for $F(z)$ throughout E. Furthermore, U_x, V_y, V_x, U_y are continuous in E since $f(z)$ is. Therefore, $F(z) = U + iV$ is analytic throughout E. From (6) we have that $F'(z) = U_x + iV_x = f(z)$ so we have proved thus far:

If $f(z)$ is an analytic function in a disk $E : |z - \alpha| < R$, then $\exists$ another single-valued analytic function $F(z)$ in E such that $F'(z) = f(z)$.

Proof of Cauchy Theorem. Step 2. Part 4

Now let Γ be an arbitrary contour joining any two points α and β in E. Then

$$\int_{\Gamma} f(z)\,dz = \int_{\Gamma} \frac{dF}{dz}\,dz = F(\beta) - F(\alpha)$$

which is path independent. From our earlier result, this means that if $f(z)$ is analytic in E, then

$$\oint_{C} f(z)\,dz = 0$$

for all closed contours C inside E.

Proof of Cauchy Theorem. Step 3. Part 1

Step 3: Consider C a simple closed contour in D. $\exists$ a number $d > 0$ such that if $z_1 \in C$, then the disk $E_1 : |z - z_1| < 2d$ is contained in D. (For $\exists$ a number $\rho > 0$ which is the shortest distance from any point of C to the boundary of D.)
Now cover D with a rectangular grid of lines $x = const.$ $y = const.$ with uniform spacing $d/2$.

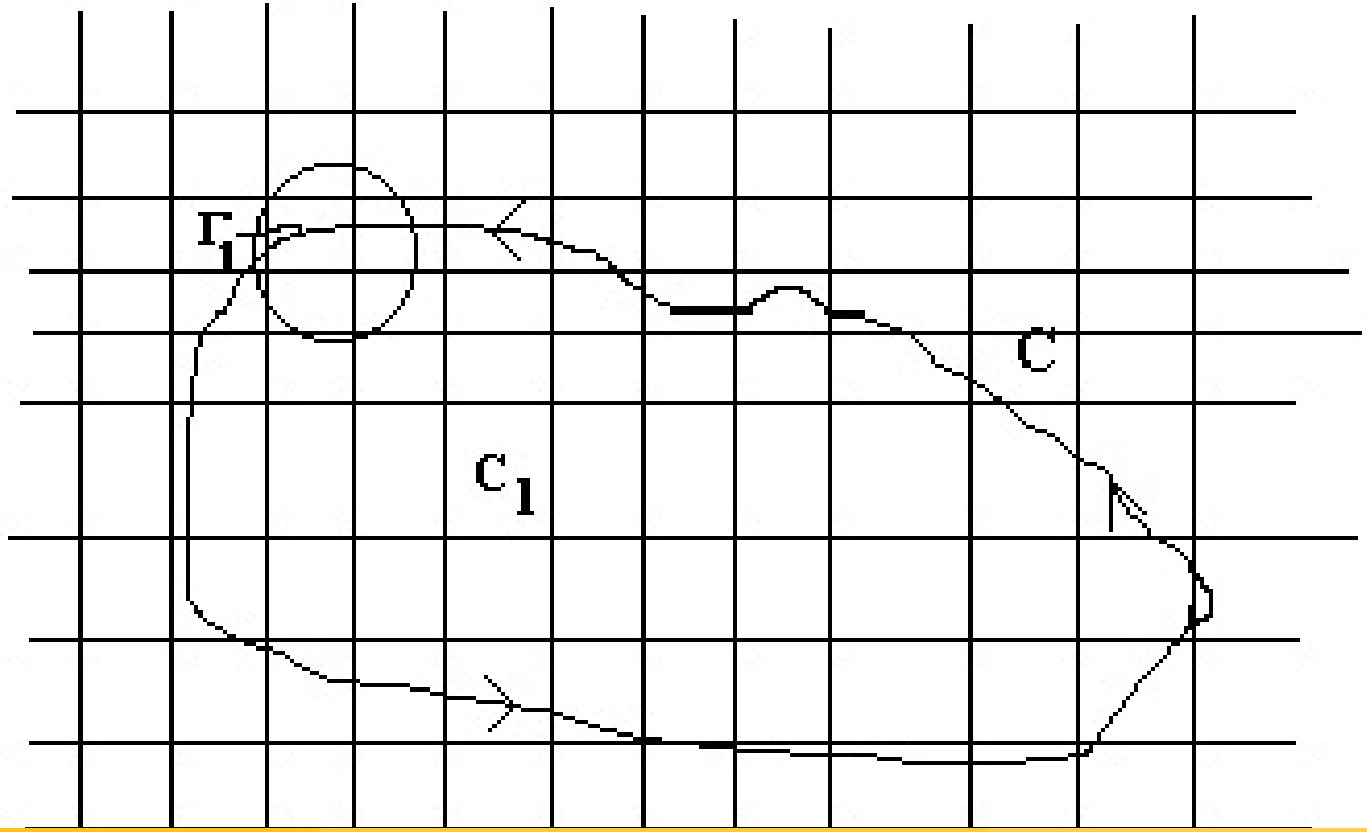

Proof of Cauchy Theorem. Step 3. Part 2

Those squares with points in common with C and its interior are of two types:
a) Entirely interior to C (perimeters $C_1, C_2, \ldots, C_n$)
b) Cut by C.
In type b) we construct $\Gamma_1, \Gamma_2, \ldots, \Gamma_m$ consisting of parts of the boundary of the square (that lies inside of C) and sections of C (inside the square). Then

$$\oint_C f(z)\,dz = \sum_{k=1}^{n} \oint_{C_k} f(z)\,dz + \sum_{j=1}^{m} \oint_{\Gamma_j} f(z)\,dz$$

But the first term on the right equals zero by Step 1 and the second term is zero by Step 2. This completes the proof.

Cauchy Theorem: Examples. Part 1

It is important to understand Cauchy's integral theorem. The examples below are designed to clarify them.

Example

$$\oint_C z^n dz = 0$$

for any nonnegative integer n and any simple closed path C in the plane, since z^n is analytic everywhere, and the entire plane is a simply connected domain.

Cauchy Theorem: Examples. Part 2

Example

Consider

$$\oint_C \frac{1}{z} dz$$

where C is the unit circle about the origin, oriented counter-clockwise. We may write $C : z(t) = \cos t + i \sin t, \ \ 0 \leq t \leq 2\pi$ or $z(t) = e^{it}$. Then $z'(t) = ie^{it}$ so that

$$\oint_C \frac{1}{z} dz = \int_0^{2\pi} \frac{1}{e^{it}} ie^{it} dt = i \int_0^{2\pi} dt = 2\pi i$$

We do not get zero here, even though $\frac{1}{z}$ is analytic on C. The reason the theorem does not hold is that we cannot find a simply-connected domain D containing C and in which $\frac{1}{z}$ is analytic. Note that $\frac{1}{z}$ is not analytic at $z = 0$, which is inside C.

Cauchy Theorem: Examples. Part 3

In general any time C goes around one or more points where $f(z)$ is not analytic, then Cauchy's theorem fails to hold. In such a case $\oint_C f(z)\,dz$ may or may not be zero - the theorem does not say.

Example

To illustrate this last point consider $\oint_C \frac{1}{z^2}dz$, with C as in the previous example. Now $\frac{1}{z^2}$ is not analytic at 0, and hence not analytic is a simply connected domain containing C. However,

$$\oint_C \frac{1}{z^2}dz = \int_0^{2\pi} \frac{1}{\left(e^{it}\right)^2} ie^{it}dt = \int_0^{2\pi} ie^{-it}dt = i\int_0^{2\pi} \cos t dt + \int_0^{2\pi} \sin t dt = 0$$

Thus

$$\oint_C \frac{1}{z^2}dz = 0,$$

even though the conditions of Cauchy's theorem do not hold.

Thank you